# Board 2 Report

**Alexander Martinez**

3/12/2026

ECEN 3730: Practical PCB Dsgn Manufacture

# Contents


**1 Objectives** **2**

**2 Plan of Record (POR)** **2**

2.1 What It Means to "Work" . . . . . 3

**3 "Napkin Sketch"** **3**

**4 Component Selection** **4**

4.1 Frequency . . . . . 4

4.2 Duty Cycle . . . . . 4

4.3 Estimation of current through LEDs . . . . . 4

**5 BOM** **4**

**6 Schematic** **5**

**7 Layout** **6**

**8 Picture of Board Before Assembly** **7**

**9 Assembled Board** **8**

**10 What Worked** **8**

**11 What Didn't Work and What Was Debugged** **8**

**12 Scope Screenshots and Analysis** **9**

12.1 Calculating Thevenin's Resistance . . . . . 9

12.2 5V and 3.3V Power Rails . . . . . 10

12.3 555 Output Vs Hex Inverters . . . . . 11

12.4 Rail Compression Due to Layout Differences - 5V . . . . . 12

**13 Best Design Practices Followed** **13**

**14 Possible Improvements** **14**

**15 Conclusion** **14**

# 1 Objectives

The purpose of this board is to compare the effects of layout practices by constructing identical hex inverter circuits with good and bad practices. The good circuit will contain a continuous return plane and a decoupling capacitor close to the IC's power pin, while the bad circuit will have no ground plane under its routing and IC with the decoupling capacitor far away from the IC pin and its decoupling.

# 2 Plan of Record (POR)

This circuit should contain the following:

- An AC to DC power plug to power the circuit.
- An LED indicator for the 5V power supply rail (includes resistor)
- An LDO to convert the 5V input to 3.3V for the option of the hex inverters to be powered with 3.3V or 5V
- An LED indicator for the 3.3V rail (includes resistor)
- An isolation switch to measure the effects of a capacitor on the 3.3V rail
- A switch to choose between 3.3V or 5V to power the hex inverters
- A header pin to isolate the 555 timer from the power supply
- A 555 timer to provide a 5V peak-to-peak square wave signal with around 500Hz and a 66% duty cycle
- Two switches to power the good, the bad, or both circuits
- Three LEDs and resistors in all six of the hex inverter's outputs to draw load current
- 10k pull up resistors for the inverter inputs to avoid floating states
- Test points for the 555 output, 5V rail, 3.3V rail, good and bad quiet lows and highs, good and bad inverter outputs, and good and bad triggers

## 2.1 What It Means to "Work"

- When plugged in, the 5V and 3.3V indicator LEDs should turn on and both rails should be able to be measured from their respective test points.
- When the switch is on, the 555 timer should yield about a 500Hz square wave with a 66% duty cycle and a rise time of 100ns. This should be able to measured in the 555 output test point.
- Switches 3 and 4 (see schematic below) should control the power of the good and bad hex inverters.
- The good and bad hex inverters should be able to light the LEDs in both 5V and 3.3V modes.
- The quiet lows and highs, along with the triggers should be able to measured from their respective test points.

# 3 "Napkin Sketch"

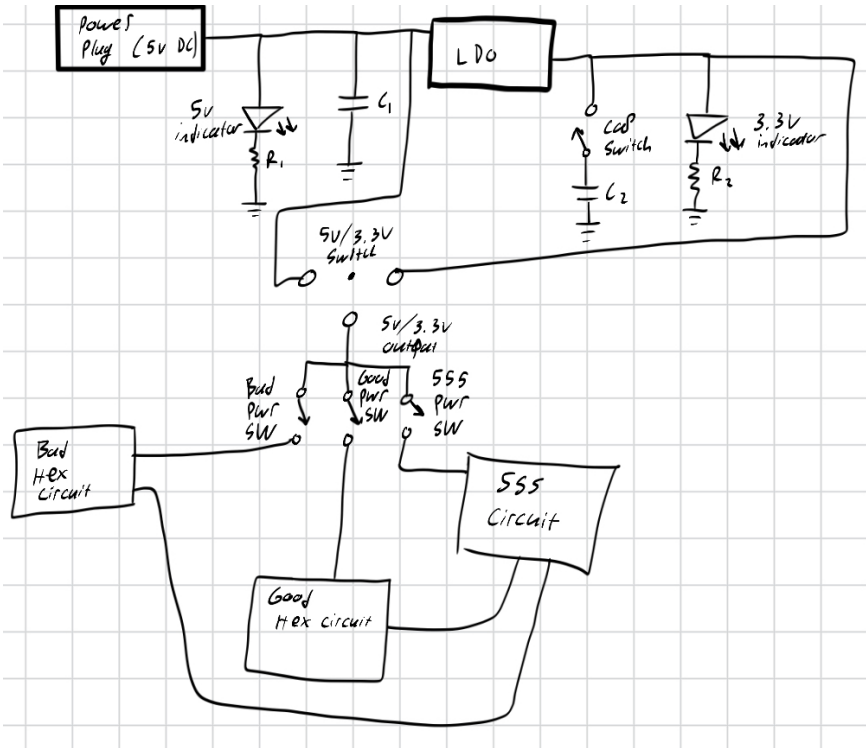


Figure 1: "Napkin Sketch" of Circuit

# 4 Component Selection

The 555 timer we are using is the TLC555C which has sinking capabilities of up to 150mA and sourcing capabilities of up to 15mA. This is adequate for our purposes. Its maximum output rise time is about 75ns, and it has a minimum input supply of 2V.

## 4.1 Frequency

The TLC555 datasheet provides the equation

$$f = \frac{1.44}{(R_a + 2R_b)C}$$

Using this equation, if we set $R_a$ and $R_B$ to both be 1kΩ and C = 1$\mu$F, we accuire an output frequency that is close to 500Hz (480Hz - close enough for our purposes).

## 4.2 Duty Cycle

The datasheet also provides the equation for the output waveform duty cycle:

$$1 - \frac{R_B}{R_A + 2R_B} = D$$

Solving this, we obtain a duty cycle of 66.6%, which is perfect for our use.

## 4.3 Estimation of current through LEDs

Assuming a forward voltage of 2V across the LEDs, by ohms law:

Current through LED (5V) = $\frac{5V-2V}{49.9\Omega} = 100.33mA$

Current through LED (3.3V) = $\frac{3.3V-2V}{49.9\Omega} = 42.48mA$

# 5 BOM

1. TLC55C
2. LDO - AMS1117
3. Hex Inverter - SN74AHC14DR
4. Resistor - 49.9Ω x6, 1kΩ x4, 10kΩ x2

5. LED - 8

6. Power Plug

7. Header Pins x3 and Shorting Flags x4

8. Capacitor - 1$\mu$F x1, 22$\mu$F x5

9. Mini Slide Switch - x1

# 6 Schematic

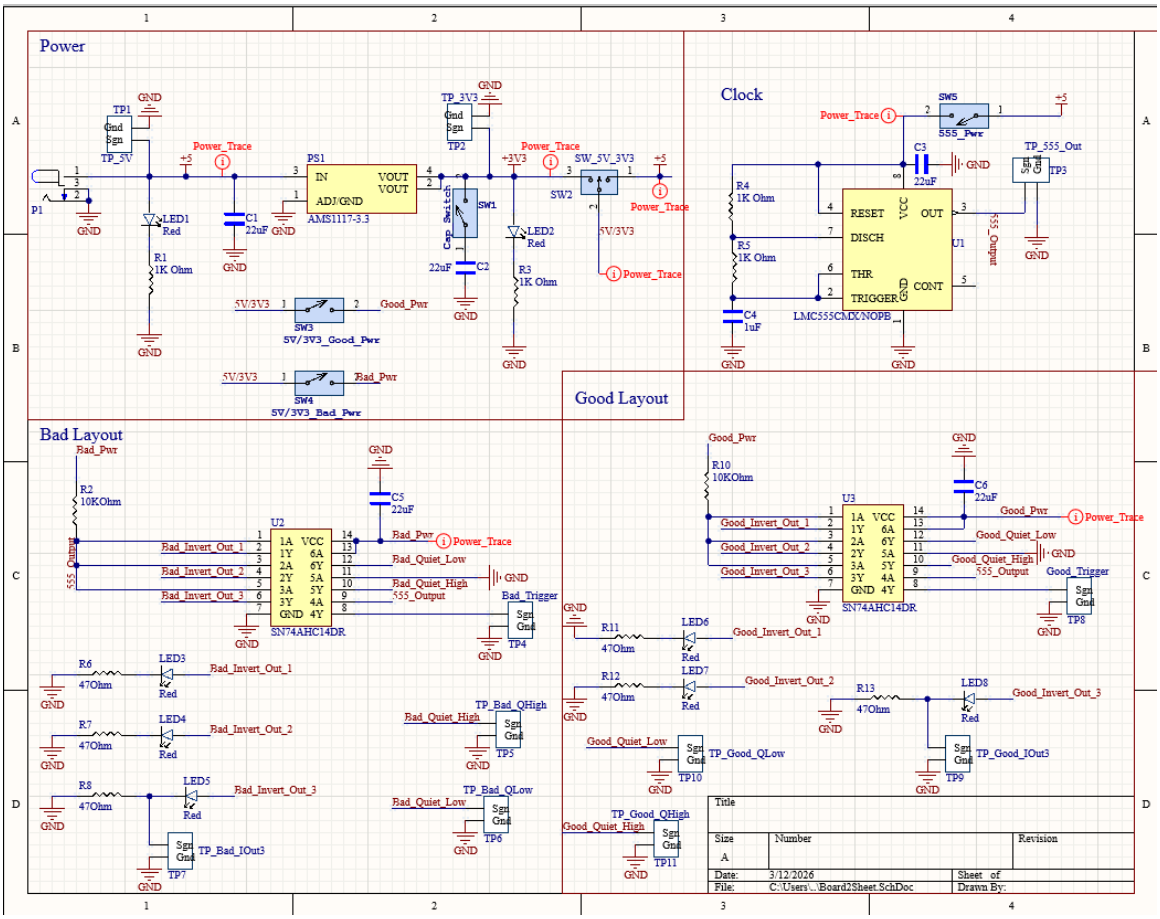


Figure 2: Schematic

# 7 Layout

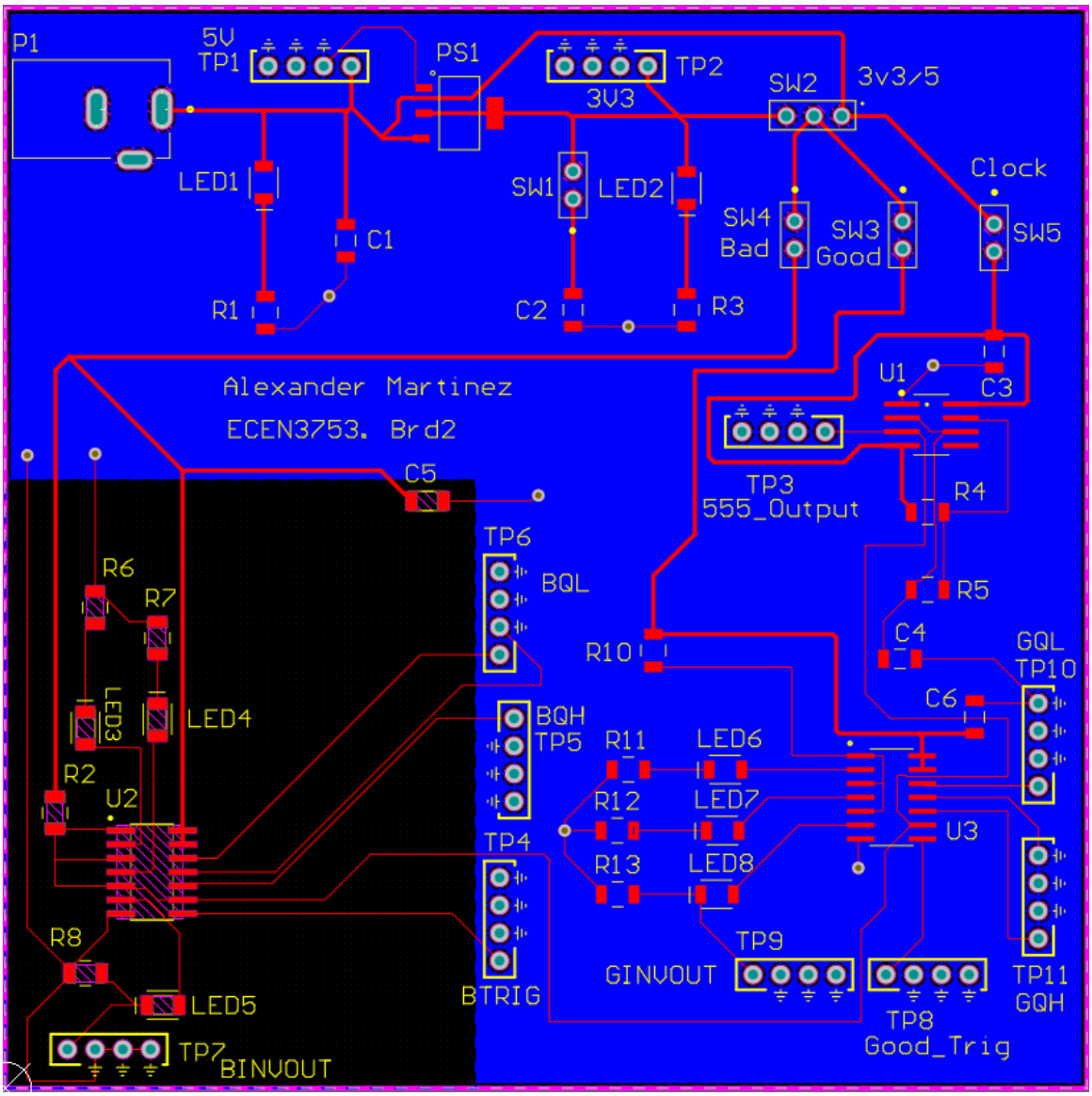


Figure 3: Layout

# 8 Picture of Board Before Assembly

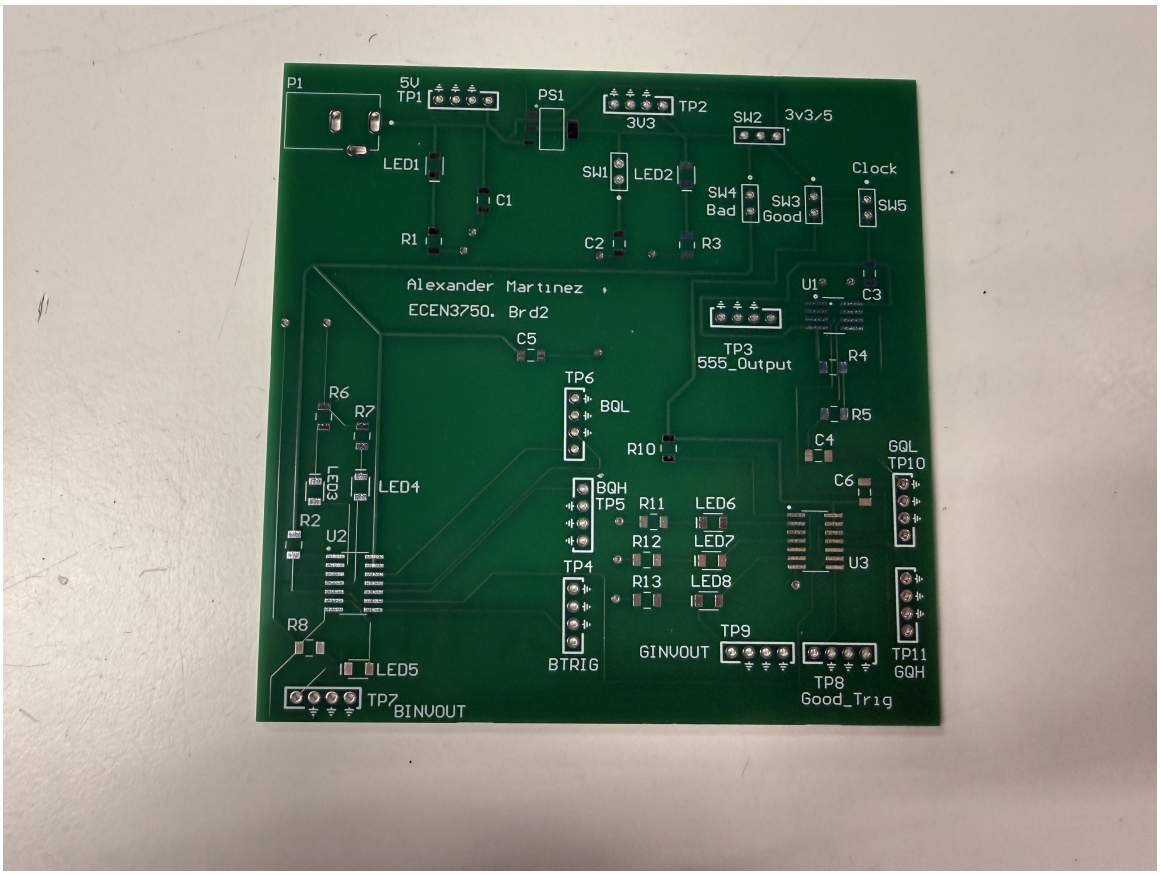


Figure 4: Board Before Assembly

# 9 Assembled Board

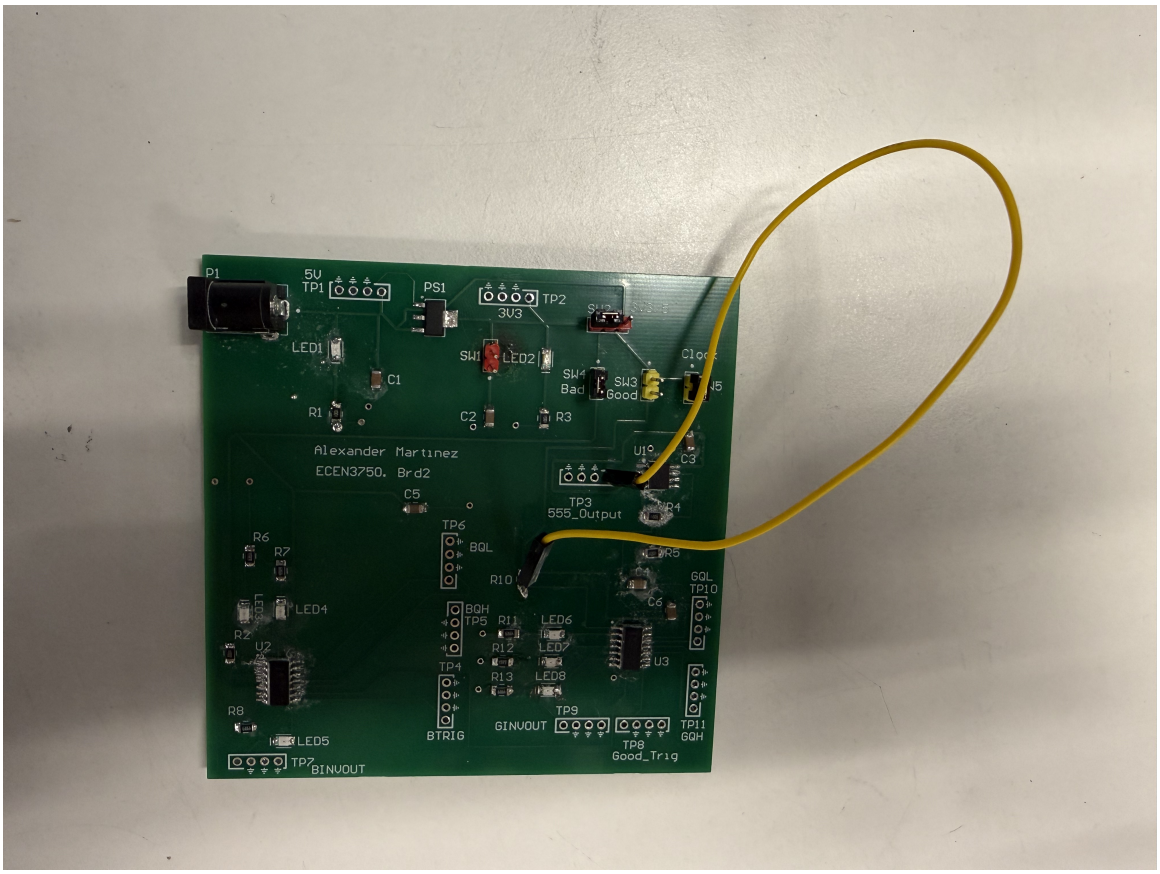


Figure 5: Board After Manual Soldering

# 10 What Worked

All of the bad side worked as expected, and the 3.3V LED indicator turned on. All of the test points worked as intended. The switches also worked as expected.

# 11 What Didn't Work and What Was Debugged

Originally, two of the three LEDs for the good inverter circuit did not turn on (7 and 8). Additionally, the 5V LED did not turn on either. After re-soldering, they worked. I knew it had to be a soldering issue for the inverter circuit, because when any of the prongs of the other two inputs were touched with the yellow flywire, LED6 still turned on.

Then there was the reason for the flywire: on the schematic the 555_Output net was mistakenly

not tied to Good_Invert_Out_1-3. The solution to this was to sacrifice the TP3 test point of the 555_Output and connect a flywire from that TP to the bottom of R10. This made taking 555 output measurements much harder to probe. After attaching this flywire, all worked as expected.

# 12 Scope Screenshots and Analysis

## 12.1 Calculating Thevenin's Resistance

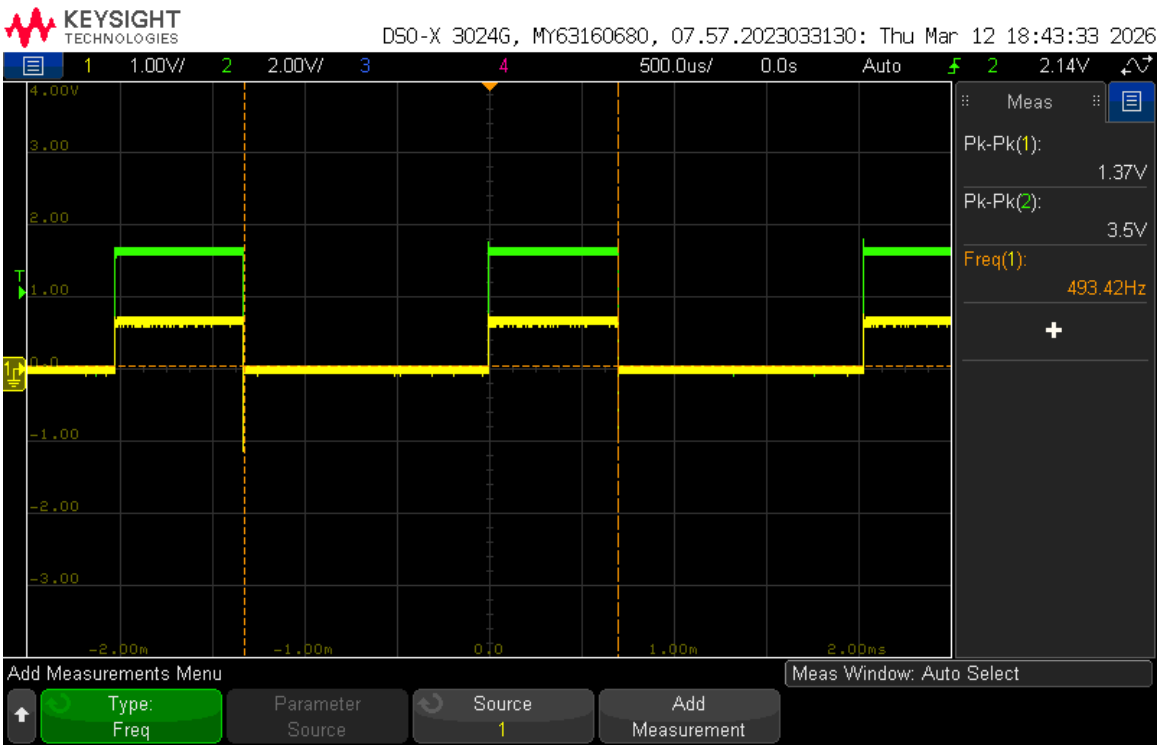


Figure 6: Voltage Across 49.9Ω Resistor

Figure 4 shows the voltage across the 49.9Ω resistor. The first yellow channel shows the voltage across the 49.9Ω resistor when the LED is on. The second green channel shows the hex inverter output without load measured at TP8. Without load, the amplitude of the output is 3.5V (open circuit voltage - $V_{th}$). The amplitude of the voltage across the resistor is 1.37V (Resistor voltage - $V_R$). If we take the diode voltage to be 2V, the load voltage is 2V + 1.37V = 3.37V. (Load Voltage - $V_L$). Then, by Ohms Law, the current through the resistor is $I_L = \frac{1.37}{49.9} = 27.45mA$.

$$R_{th} = \frac{V_{th} - V_L}{I_L} = \frac{3.5 - 3.37}{27.45mA} = 4.74\Omega$$

This means that the hex inverter's internal resistance is around 4.74Ω. This means that a voltage

drop across the hex inverter will occur and it is not an ideal source.

## 12.2 5V and 3.3V Power Rails

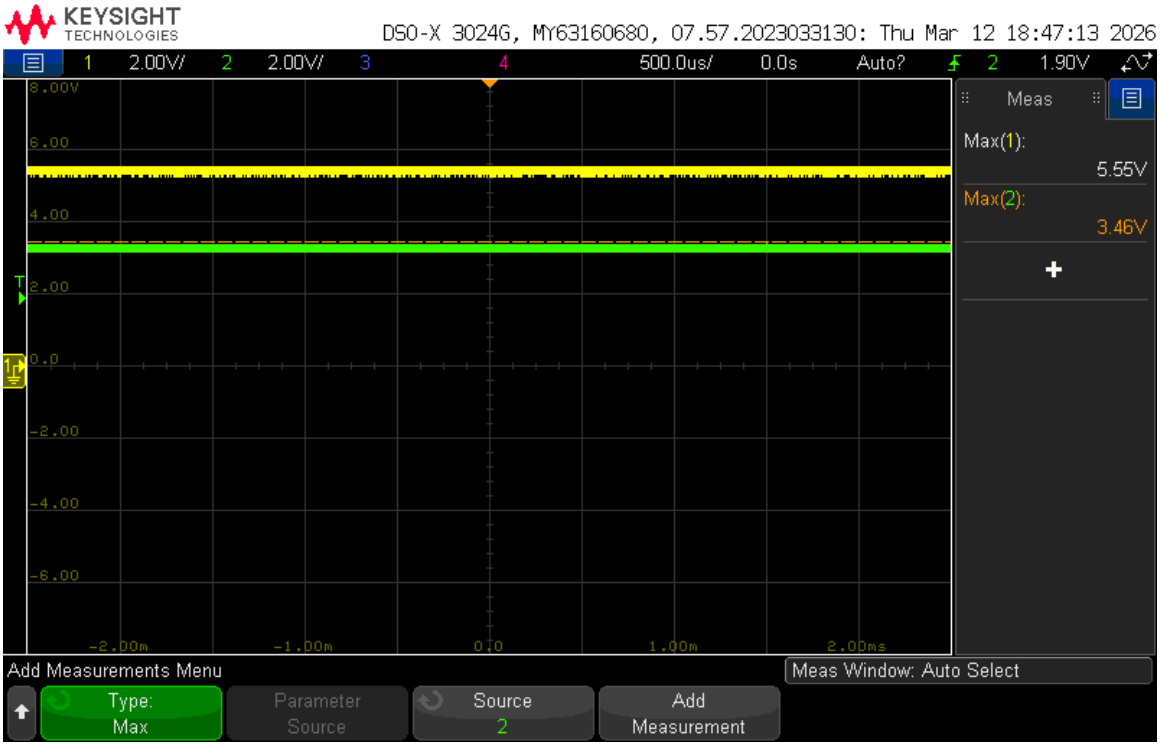


Figure 7: 5V and 3.3V Power Rails

Figure 5 shows the 5V power rail (yellow) and the 3.3V power rail (green). These were measured in test points 1 and 2, respectively. Although not exactly 5V and 3.3V, no major issues were found here.

## 12.3 555 Output Vs Hex Inverters

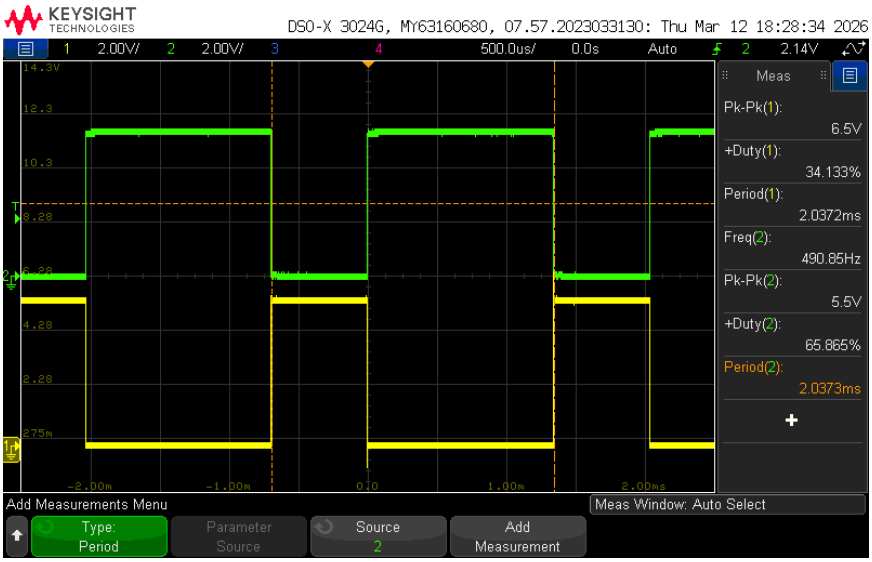


Figure 8: 555 Timer Output Vs Good Hex Trigger Signal

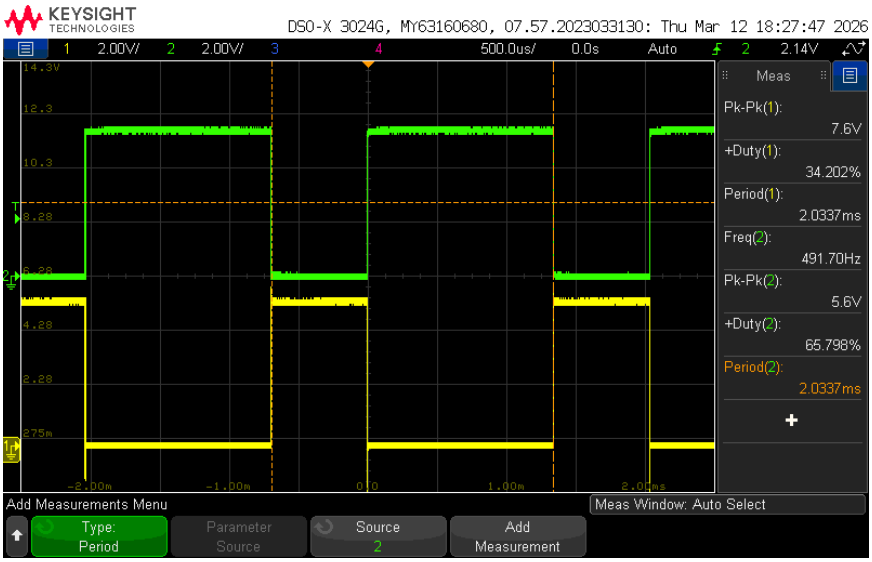


Figure 9: 555 Timer Output Vs Bad Hex Trigger Signal

In figures 6 and 7, the green channel 2 shows the 555 output and the yellow channel 1 shows the good and bad hex inverter trigger output, respectively. As expected, the inverter is high when the 555 is low, and visa versa. All of the values except for the duty cycle such as the frequency, voltage amplitude, and period are the same for all of the signals (The p-p voltage for the hex triggers reads larger, but we can see this is due to the spike, if we neglect about 2V, the p-p of all of the signals are about the same). The duty cycle of the hex inverters is 1 - 555 duty cycle $\approx$ 33%. Refer to the

table below:

| Description | 555 Timer Output | Good Hex Trigger | Bad Hex Trigger |
|---|---|---|---|
| Frequency (Hz) | 490.85 | 490.85 | 490.85 |
| Peak-to-peak Voltage (V) | 5.5V | 6.5 | 7.6 |
| Duty Cycle (%) | 65.865 | 34 | 34 |
| Period (ms) | 2.037 | 2.037 | 2.037 |

Table 1

## 12.4 Rail Compression Due to Layout Differences - 5V

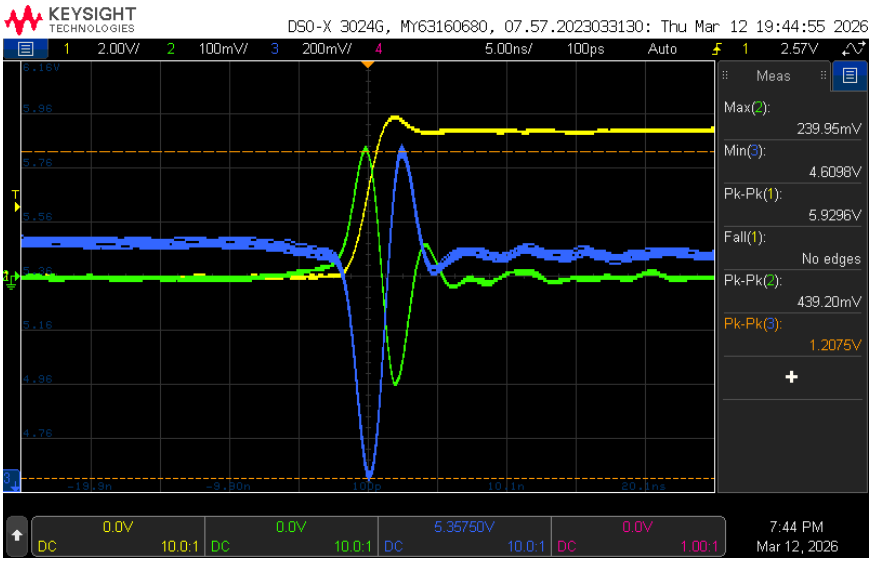


Figure 10: Good Layout Rail Compression During Rise Time

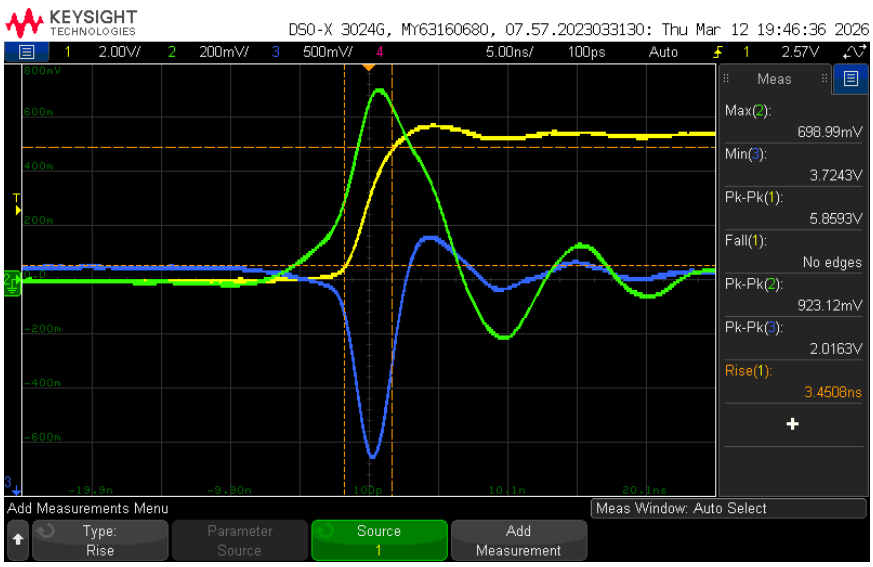


Figure 11: Bad Layout Rail Compression During Rise Time

In the above two figures, yellow is the hex inverter trigger, blue is the quiet high, and green is the quiet low. During transistions, the voltage droop on VCC and the ground bounce compress the rail, which reduces the true inverter supply.

## 13 Best Design Practices Followed

1. A decoupling capacitor was placed near the IC to minimize voltage noise due to the voltage drop across the loop inductance in the power rail (not in the bad layout so we could compare its effects)
2. Proper labeling for all switches and test points
3. Proper indicator LEDs were used for debugging
4. Switches were placed at the boundary of different sections
5. Reduced the amount of unique parts
6. Except in the bad layout, a continuous ground place was used on the bottom layer for proper return paths
7. Thicker trace widths were used for power nets

## 14 Possible Improvements

When making the schematic, I should have paid more attention when attaching nets, to avoid the same issue from this board requiring the flywire. Routing could have been better on this board. Although there were no cross unders, some of the routing could have shorter traces. Finally, when soldering one of the switches, I burnt some of the PCB so that it turned black. I could be more cautious about this in the future.

## 15 Conclusion

This board demonstrates the importance of using best design practices - decoupling capacitors close to the IC and a continuous return place when possible. This lab also helped with my debugging and ociliscope skills. Although there were some issues with soldering, this was one by my best soldered boards so far! We also were able to calculate the internal Thevenin resistance of different components. This is very useful for explaining discrepancies in theory and practicality.